GRASYS
gas separation systems

membrane nitrogen plants and stations

viable economic solution

www.grasys.com

We are in to maximize your success

GRASYS is the advanced engineering company engaged in the field of design and manufacturing of up-to-date facilities for the production and separation of technical gases. Company is ranked among major European producers of industrial gas production and separation systems designed on the basis of non-cryogen technologies.

GRASYS offers a wide range of air separation and gas separation systems integrating the advanced membrane and adsorption technologies of gas separation.

Competence

GRASYS mobile and stationary plants designed to produce and separate gases are the most up-to-date and efficient gas separation systems, well established on the markets of Russia, in CIS and Baltic countries as well as in around the world.

GRASYS customers' list features more than 100 major, widely recognized companies. Company products were recognized by such majors as Gazprom, Rosneft, YUKOS, TNK-BP, LUKOIL, Surgutneftegaz, Shell, Solvalub, RITEC, Tatneft, Slavneft, Salym Petroleum Development N.V., TVEL, Empils, Russkiye Kraski, Kotovo paint & varnish plant and many others.

Nitrogen plants

One of the Company priority lines of activity is the manufacturing of membrane nitrogen plants and stations-stationary and mobile complexes designed for the production of nitrogen from air. GRASYS nitrogen plants represent exceptionally powerful systems utilizing air for the production of gaseous nitrogen. In advanced economies, membrane nitrogen plants have almost driven out of the market alternative technologies of technical nitrogen generation except for such applications where nitrogen is not required in commercial volumes.

Production

In GRASYS, a special emphasis placed on the quality and dependability of the produced systems. Company facilities are produced at the plants comprising the association of defense enterprises. A rigorous quality assurance system covering the consumable materials and constituent parts applies to all stages of the production activity, and the quality of modules is controlled at each stage of manufacturing and assembly cycles. All systems are provided with the "Permit for application" issued by the Federal environmental, engineering and nuclear supervision agency (Rostechnadzor).

Technologies

GRASYS conducts scientific researches and undertakes engineering developments in the specialized laboratories of the "Kurchatov Institute" Scientific & Research Center, in close collaboration with such established companies as Praxair, Air Products, Air Liquide, and Carbotrade.

Powerful performance

Nitrogen has a wide application in the process cycles of various enterprises in the oil & gas industry, chemical and oil-chemical industries, oil refining, varnish-and-paint industry, and metallurgy. One of its key functions across a whole range of industries is the provision of explosion and fire safety accomplished through the displacement of oxygen-bearing air from the technological premises with the help of inert nitrogen gas.

Oil & Gas industry

In oil & gas industry, nitrogen appears an indispensable component under a number of technological processes. Most commonly, nitrogen is used to create inert environment serving the explosion and fire safety purposes under various technological processes and during the transportation and transshipment of hydrocarbons. Additionally, nitrogen is used for pipelines testing and purging, cleaning technological vessels in liquefied gas carriers and at hydrocarbon storage facilities.

Metallurgy

Metal industry basically avails of nitrogen as a means of protection of ferrous and non-ferrous metals during their refining. Alongside, nitrogen is helpful in such standard industry processes as neutral tempering, stress relieving, cementing, cyanide hardening, hard brazing, metal-powder sintering, extrusion die cooling etc.

Chemical and oil-chemical industry

The primary and most significant application of nitrogen in the chemical and oil-chemical industry is the creation of inert environment for cleaning and protection of technological reservoirs for the purposes of general industrial safety. Besides, nitrogen is used for pipelines pressure testing, transportation of chemicals, and regeneration of catalysts used in technological processes etc.

Varnish-and-paint industry

Varnish-and-paint industry utilizes nitrogen for the creation of inert environment in technological reservoirs to ensure the process safety, as well as for the displacement of oxygen in the process of packing aiming at the protection of drying oils from polymerization.

Pharmaceutical industry

In pharmaceutical industry, nitrogen is utilized in the pharmaceuticals packing, and the provision of explosion and fire safety in the operation with fine dispersed substances.

Electronics

In electronics, nitrogen serves as an antioxidant utilized in the production of semi-conductors and electric circuits, in the heat treatment of new products, and their blowing and cleaning.

Glass industry

In glass industry, nitrogen proves efficient as a cooling agent for bow oven electrodes, oxidation inhibitor, and air cooler under technological operations.

Economic expediency of various nitrogen supply and manufacturing methods

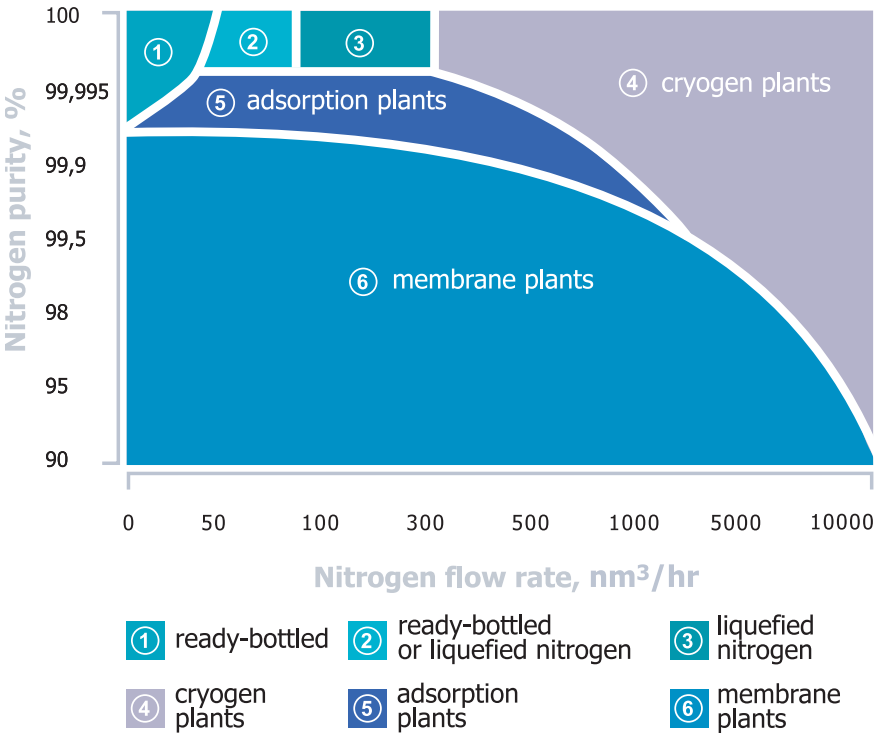

Our technologies can boost your efficiency

GRASYS is on the leading European producers of industrial gas separation and air separation plants based on the hollow-fiber membrane technology. The adoption of the most advanced membranes of the fifth generation ensures the outstanding economic performance of company products.

Gas flows separation in membrane cartridge

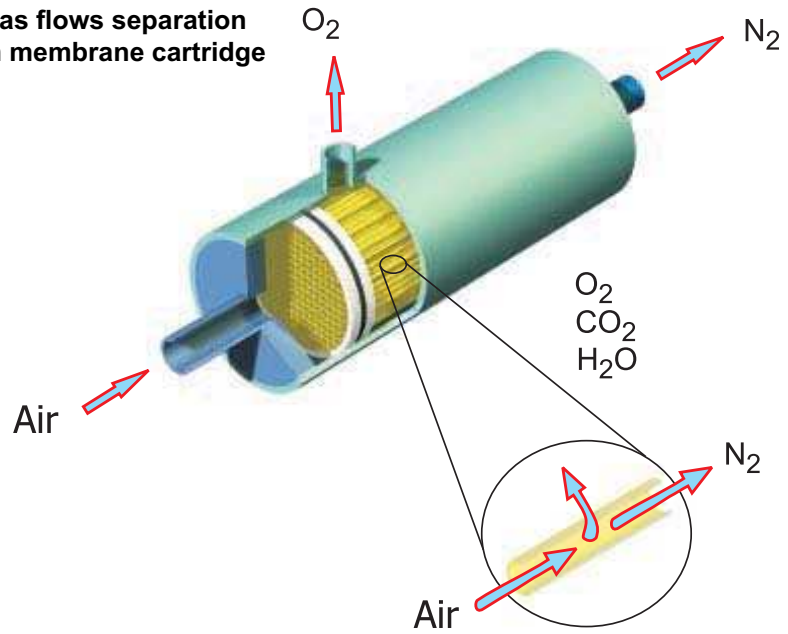

The principle of gas separation

The operation of membrane systems is based on the principle of differential velocity with which various components of a gaseous mixture permeates the membrane substance.

The role of driving force in the gas separation process is attributed to the difference in partial pressures on each side of the membrane.

Dependence of nitrogen purity on the relation of output flow to the air input flow

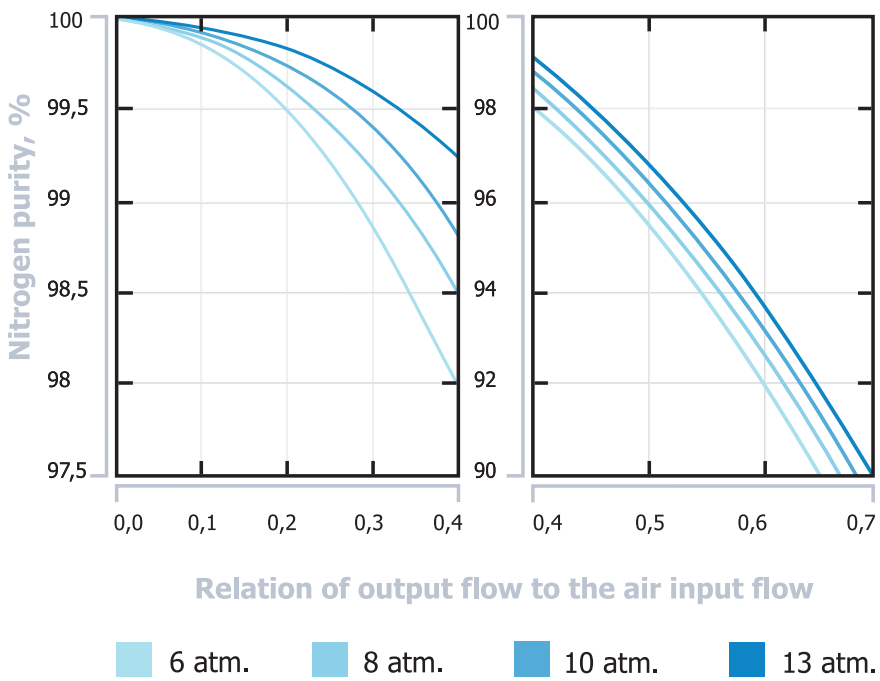

Technology

Once brought on stream, membrane technologies of gas separation have been continuously perfected. The most recent edition of gas separation membranes used by GRASYS represents a hollow-fiber membrane instead of the conventional flat membrane where the membrane consists of hollow polymer fibers with a gas-separating coating sprayed over their external surface.

Membrane cartridge

Structurally, a hollow-fiber membrane represents a cylindrical cartridge functioning as a spool with specifically reeled polymer fibers. Gas flow is supplied under pressure into the bundle of membrane fibers and separated due to the difference in partial pressures on different sides of the membrane.

ADVANTAGES

Multi-stage quality assurance

All GRASYS produced systems undergo an obligatory three-stage quality control procedure that helps guarantee their enhanced dependability and long operational life under most demanding applications.

Economic benefits

- Following the substitution of out-of-date cryogen or adsorption systems, nitrogen savings generally exceed 50%.
- The cost value of the nitrogen produced with nitrogen plants is 20 to 30 times less than the cost of ready-bottled or liquefied nitrogen.

Technical documents and permits

The engineering package includes the detailed operations manual and all technical passports and certificates. All systems are provided with the “Permit for application” issued by the Federal environmental, engineering and nuclear control agency (Rostechnadzor).

Customization

The design and manufacturing of GRASYS nitrogen plants is customer-oriented and tailor-made for each specific customer objective. This approach in the design of nitrogen systems helps deliver to customer the optimal solution when the equipment specifications precisely match customer individual requirements.

Module design

The advantage of modularity makes GRASYS plants especially beneficial for Company clients. On requirement, the output capacity of a plant may be increased at minimum cost. This option appears all the more useful when the project envisages a subsequent increase in enterprise capacity.

Dependability

The absence of moving components in gas separation blocks ensures the exceptional dependability of Company plants. Membranes are highly resistant to vibration and shocks, chemically inert to greases, moisture-insensitive, and capable of operating over a wide temperature range of -40°C to +60°C. With the appropriate maintenance, the membrane block useful life ranges between 130 000 and 180 000 hours (15 to 20 years of continuous operation).

Simplicity and convenience

Membrane nitrogen plants are fully automated and require no personnel for their operation. The start-up and shut-down periods runs for just a few minutes. The output nitrogen purity can be adjusted from 90.0 % to 99.9 % while the system is in-service.

Leading-edge nitrogen production systems

Basic performance specifications

Nitrogen output characteristics:	
purity, %	95 – 99.95
output, nm^3/hr*	5 – 5000
pressure, ex. atm.	5 – 40
Dew point, °C	-40 – -60
Ambient air temperature	
during operation, °C	+5 – +40
during storage, °C	-20 – +50
Warm-up period, not over, min	10
Membrane modules operational life (degradation factor of 10%), ths. hrs	130 – 180

* standard output capacity (t=20 °C, P=1 atm.)

NITROGEN PLANTS

General benefits delivered by GRASYS nitrogen plants:

- Extremely low maintenance costs
- Complete automation and easy maintenance
- Enhanced failure safety
- Low running costs
- Quick starting and shut-down
- Moderate dimensions and weight
- No special requirements to working premises
- Low noise level
- Enhanced operational life
- Flexible adjustment of nitrogen purity and output rate
- Easy rig-up and integration in the plant current air system

The ideal solution for remote locations

Basic performance specifications

Nitrogen output characteristics:	
purity, %	90 – 99.5
output, nm^3/hr*	5 – 5000
pressure, ex. atm.	5 – 40
Dew point, °C	-40 – -60
Ambient air temperature	
during operation, °C	-45 – +40
during storage, °C	-60 – +50
Warm-up period, not over, min	10
Membrane modules operational life (degradation factor of 10%), ths. hrs	130 – 180

* standard output capacity (t=20 °C, P=1 atm.)

NITROGEN STATIONS

General benefits delivered by GRASYS nitrogen stations:

- Mobility
- Complete self-supportability with a diesel drive
- Exceptional dependability
- Complete automation and easy maintenance
- Zero operator requirements
- Modest dimensions and weight
- Low cost of output nitrogen
- Quick starting and shut-down
- Operating ability over a wide temperature range
- No special requirements to air quality and improved pollution resistance
- Enhanced operational life

Flawless product is the keystone of your success

Membrane nitrogen plants and stations are generally viewed from the engineering-economic standpoint as an optimum solution in the production of gaseous nitrogen from air.

Nitrogen plants

GRASYS offer stationary nitrogen production systems designed to operate in closed-space working premises. The plants represent high-technology gas separation systems capable of producing nitrogen at the rate of 5 to 5000 nm^3/hr and with the purity level of 90 to 99.95%.

The key plant components are a compressor block, air-handling block, gas separation block, and a control system. Gas separation block consists of specifically configured modules producing the required purity nitrogen from the ambient air.

Integrating the latest technological advances, GRASYS nitrogen plants are exceptionally dependable, with the membrane block operational life running for up to 180 000 hours of continued performance.

Flow-sheet of a nitrogen plant

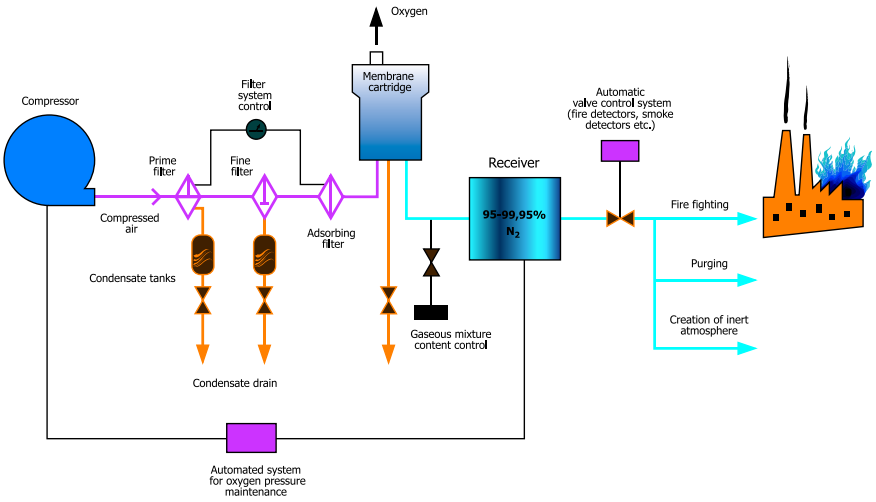

Nitrogen plants are completely self-supportable units securing automatic maintenance and control of operating parameters and emergency shut-in. No manned operation is required once the plants are the on-stream mode. Another significant advantage of GRASYS nitrogen plants is the option of flexible adjustment of the output nitrogen purity level.

PERFORMANCE CHARACTERISTICS

GRASYS nitrogen stations came as a real breakthrough in the field of heavy-producing, simple in design and utterly dependable mobile systems utilizing the ambient air fro the production of nitrogen. On customer's request, nitrogen station may optionally be provided trailer- or sledge-mounted, or as a self-propelled model.

Nitrogen stations

Specially designed and manufactured for field applications, mobile nitrogen stations represent containerized self-supportable systems aimed at producing nitrogen from the atmospheric air.

Nitrogen stations have the rated output of 5 to 5000 nm^3/hr with the nitrogen purity level varying in the range of 90 to 99.5%. A mobile nitrogen station consists of a compressor driven by a diesel or electric motor, air-handling block, gas separation block and a control system.

Nitrogen stations, as well as nitrogen plants are completely automated and require no direct involvement of operator to ensure the control of working parameters.

Recognized for their exceptional dependability and high efficiency, air separation systems used for nitrogen production are currently globally manufactured with the use of a membrane technology.

The combination of innovative technologies and long-term experience hels guarantee the top quality of the produced air separation stations, proof-tested to the world standard in the harsh environment of Siberia and the Far North.

Dependence of membrane module output rating on the nitrogen purity level at various pressures

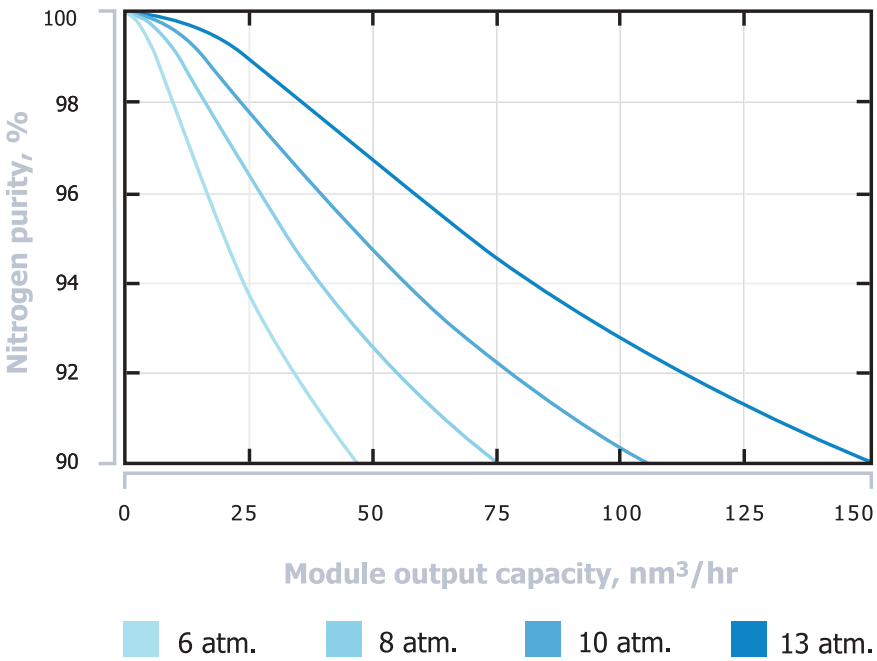

GRASYS products:

Air separation plants
- **Membrane low-pressure nitrogen plants ***
- **Membrane medium-pressure nitrogen plants ***
- Membrane oxygen plants
- Adsorption nitrogen plants
- Adsorption oxygen plants

Air separation stations
- **Mobile nitrogen stations ***
- Mobile oxygen stations

Transportable nitrogen compressor stations
- Mobile nitrogen compressor stations
- Self-propelled nitrogen compressor stations

Gas separation plants
- Hydrogen recovery plants
- Methane recovery plants
- Carbon-dioxide gas recovery plants

Nitrogen fire-fighting units

Air dryers
- Membrane air dryers
- Adsorption air dryers

*** Description of these products is contained in this Brochure**

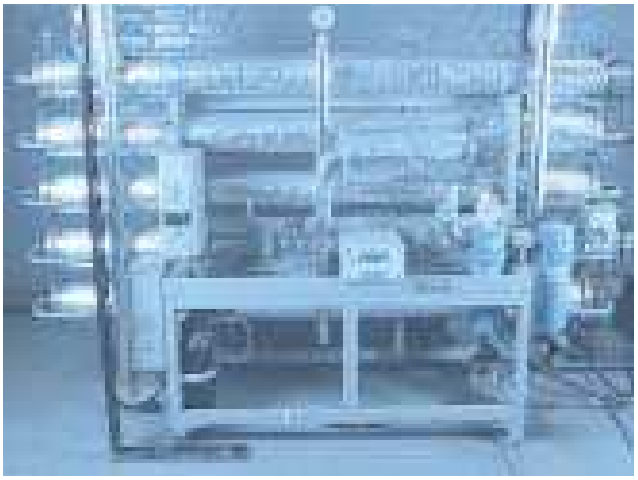

CJSC GRASYS
Bdg. 10, 25 Avtozavodskaya Str.
Moscow, 115280, Russia
Tel/Fax: +7 (095) 775-47-48, 788-58-68
e-mail: info@grasys.com
www.grasys.com